Cessna Agwagon
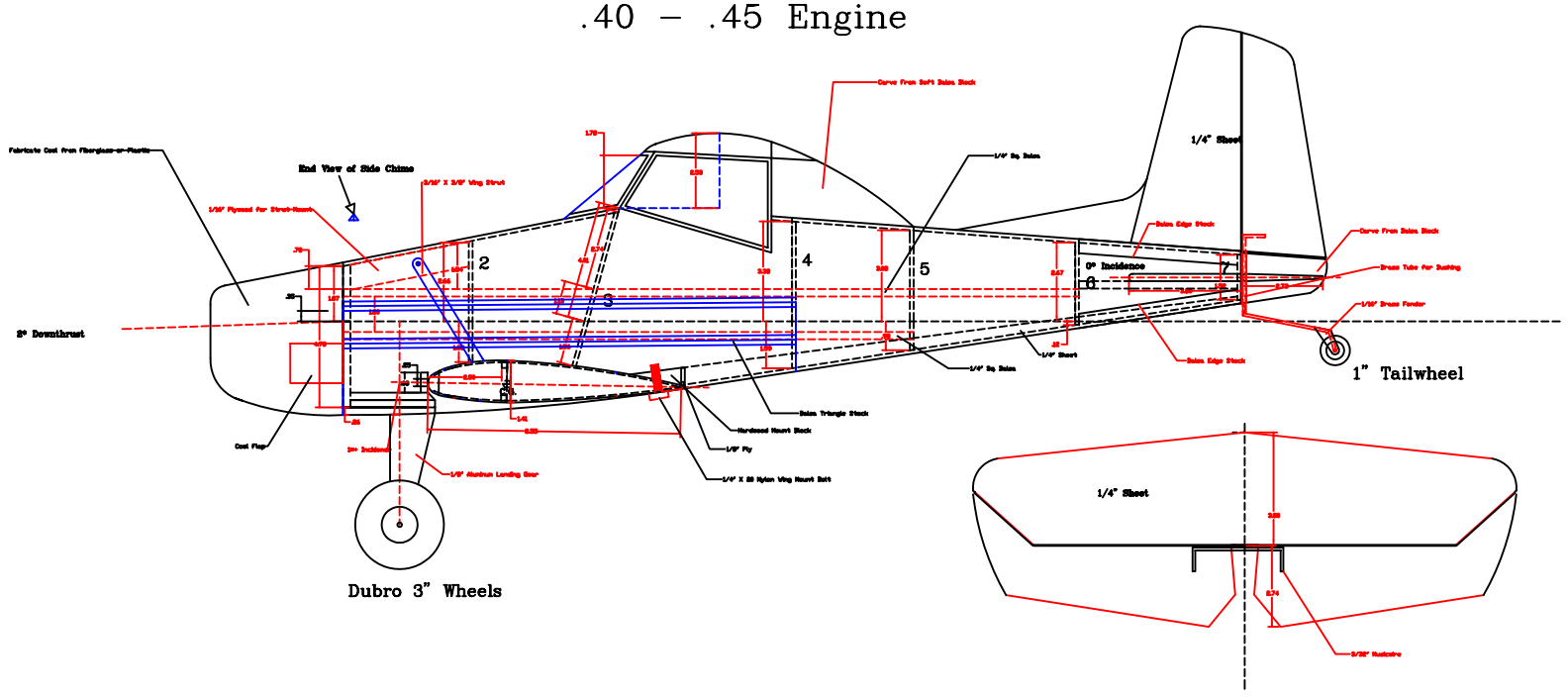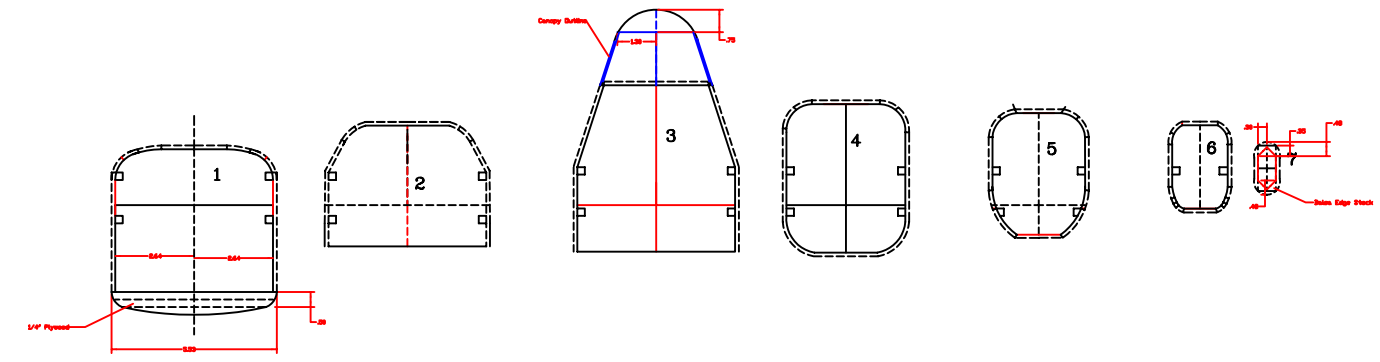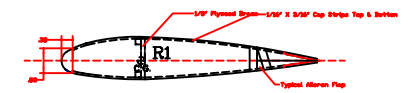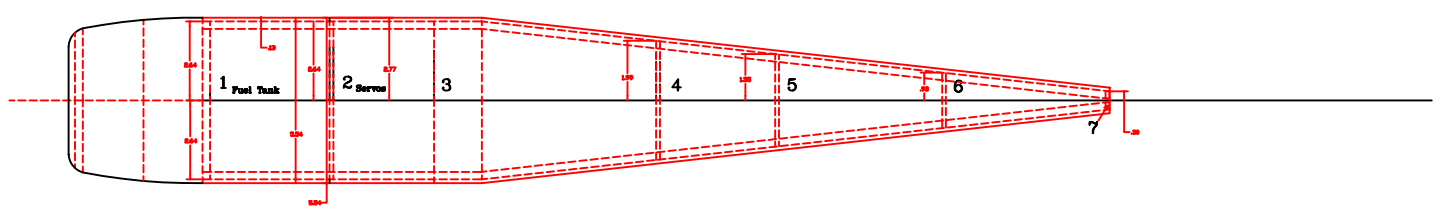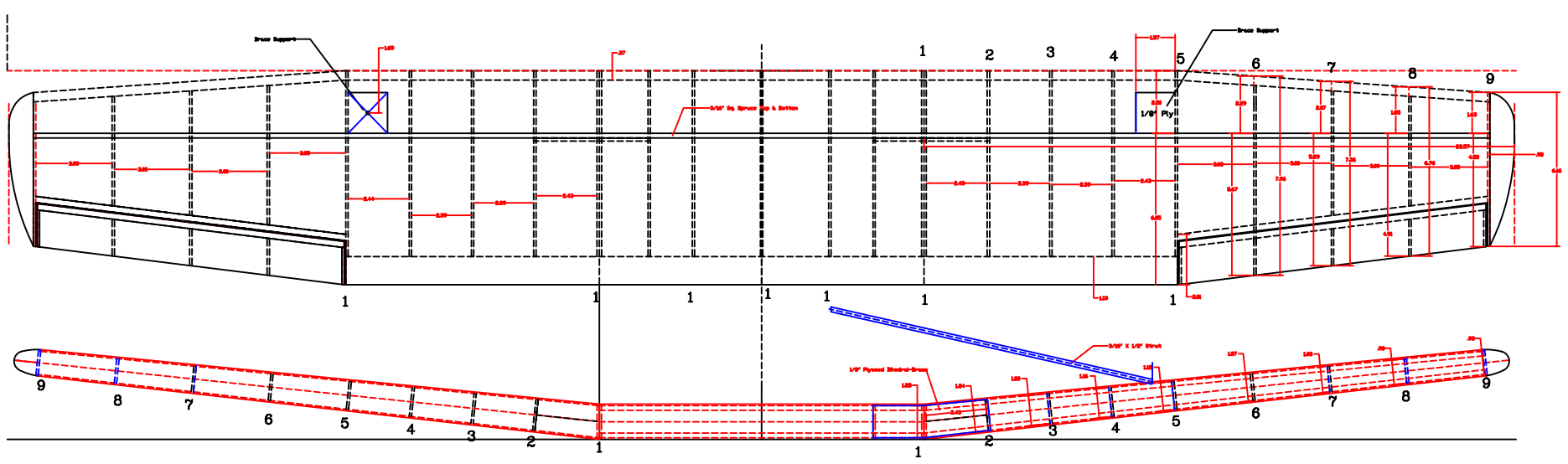
.40 – .45 Engine